A

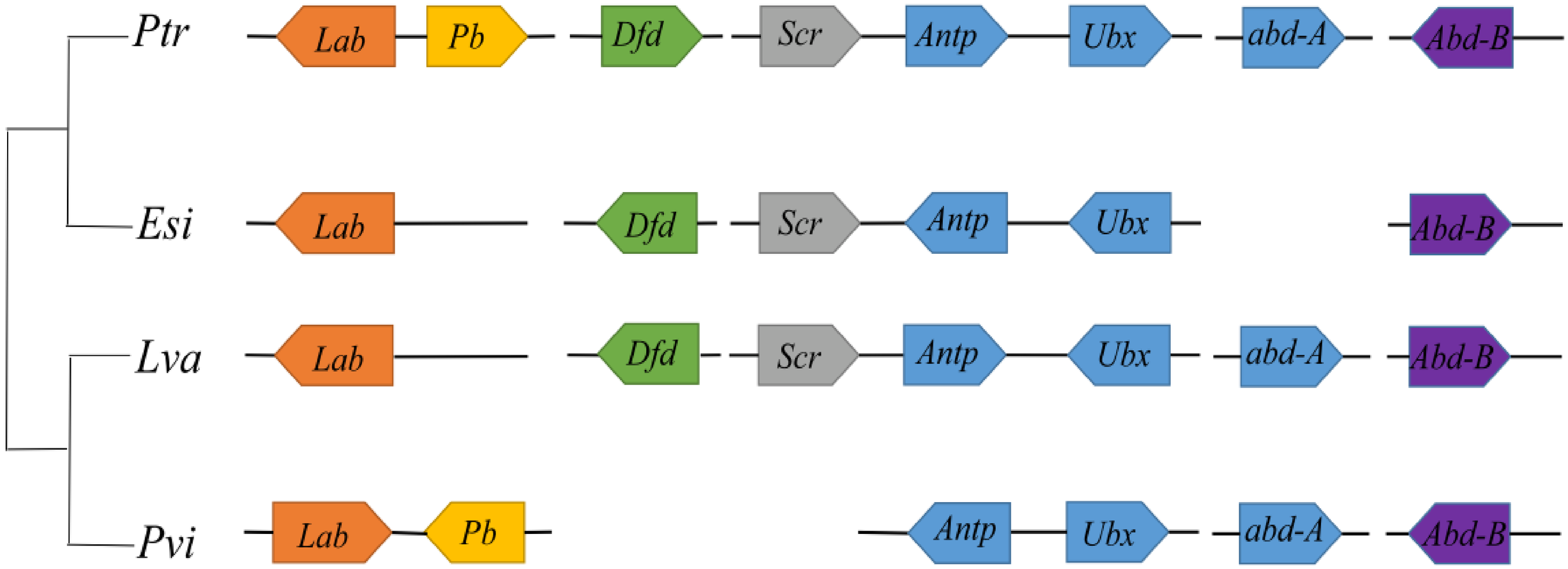
Ptr
Lab
Pb
Dfd
Scr
Antp
Ubx
abd-A
Abd-B
Esi
Lab
Dfd
Scr
Antp
Ubx
Abd-B
Lva
Lab
Dfd
Scr
Antp
Ubx
abd-A
Abd-B
Pvi
Lab
Pb
Antp
Ubx
abd-A
Abd-B